Part number:

HYDROMA — HYDRAULICKÉ SYSTÉMY | HIDROMA SISTEMS — UKŁADY HYDRAULICZNE | HYDROMA — ГИДРАВЛИЧЕСКИЕ СИСТЕМЫ

VBSO-DE-NA

05.42.25 - X - Y - Z

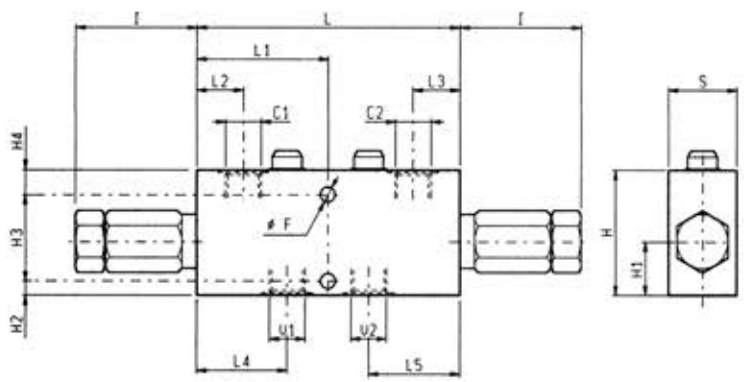

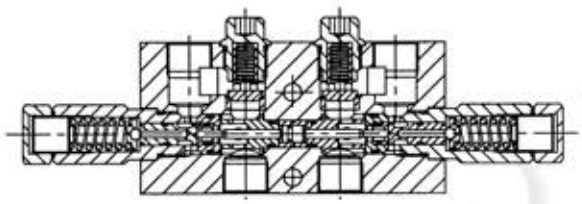

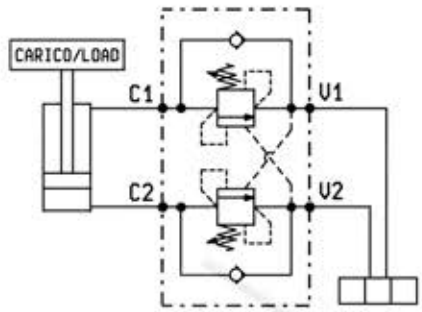

DATI TECNICI / TECHNICAL DATA

Pressione max. Max. pressure	350 bar
Portata max. vedi diagramma Flow see performance graph	
Taratura della valvola: almeno 1.3 volte superiore alla pressione indotta dal carico Pressure setting: at least 1.3 times the load induced pressure	
Cappellotto per piombatura Sealing Cap	Codice/Ordering code 03.05.01.001

S	L5	L4	L3	L2	L1	L	I	H4	H3	H2	H1	H	F				Y	Peso kg Weight kg
40	62	62	29	29	90	180	69	30	50	10	35	90	10.5				3/4	2.60
40	53.5	53.5	27.5	27.5	77.5	155	71.5	14	48	8	30	70	8.5				1/2	2.10
35	48.5	48.5	25.5	25.5	77.5	145	61.5	17	40	8	26.5	65	8.5				3/8	1.45

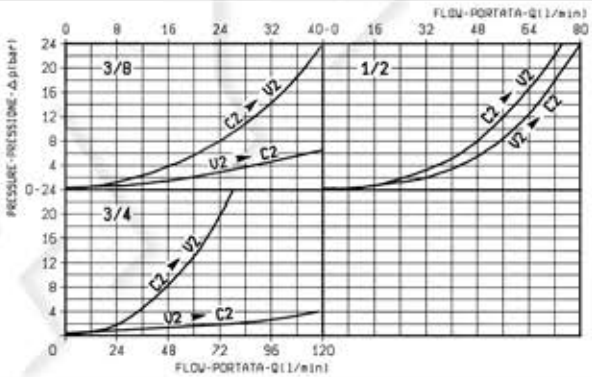

X	RAPPORTO DI PILOTAGGIO PILOT RATIO
03	1/2 - 7.6 : 1 3/4 - 7.6 : 1
10	3/8 - 3.6 : 1 1/2 - 3 : 1 3/4 - 3 : 1

Z		MOLLE / SPRINGS Campo taratura min - max bar Adj. press. range bar	Incremento press. bar / giro vite Press. increase bar / turn	Taratura standard bar (Q = 5 l/min) Std. setting bar (made at = 5 l/min)	Cod. ordinazione Ordering code	Colore Colour
3/8	20	60-210	60	200	03.51.01.075	verde green
	35	100-350	100	350	03.51.01.059	giallo yellow
1/2	20	60-210	68	200	03.51.01.152	verde green
3/4	35	100-350	105	350	03.51.01.142	giallo yellow

Y	ATTACCHI / PORT SIZE V1-V2-C1-C2
02	G 3/8
03	G 1/2
04	G 3/4